BROWARD COUNTY
PUBLIC WORKS DEPARTMENT
PLOTTED: 10/2024

WATER & WASTEWATER SERVICES
ENGINEERING DIVISION
2555 WEST COPANS ROAD
POMPANO BEACH, FL 33069
PHONE NO. 954-831-0745
FAX: 954-831-0925

STANDARD DETAIL

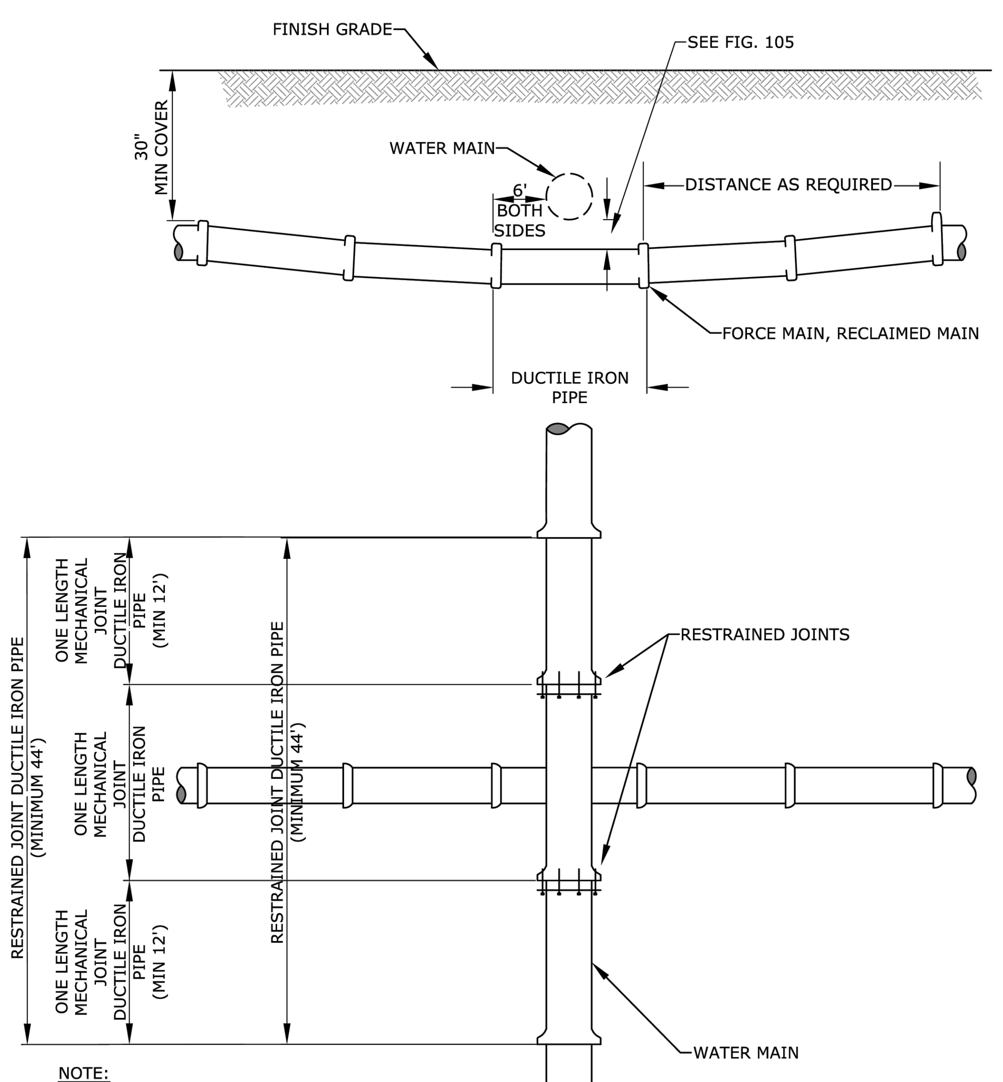

NOTE:

JOINTS SHALL NOT BE DEFLECTED MORE THAN 50% OF MANUFACTURER'S RECOMMENDED DEFLECTION

REVISED 7/7/2021

STANDARD UTILITY CROSSING

FIGURE 106

BROWARD COUNTY
PUBLIC WORKS DEPARTMENT
PLOTTED: 10/2024

WATER & WASTEWATER SERVICES
ENGINEERING DIVISION
2555 WEST COPANS ROAD
POMPANO BEACH, FL 33069
PHONE NO. 954-831-0745
FAX: 954-831-0925

STANDARD DETAIL

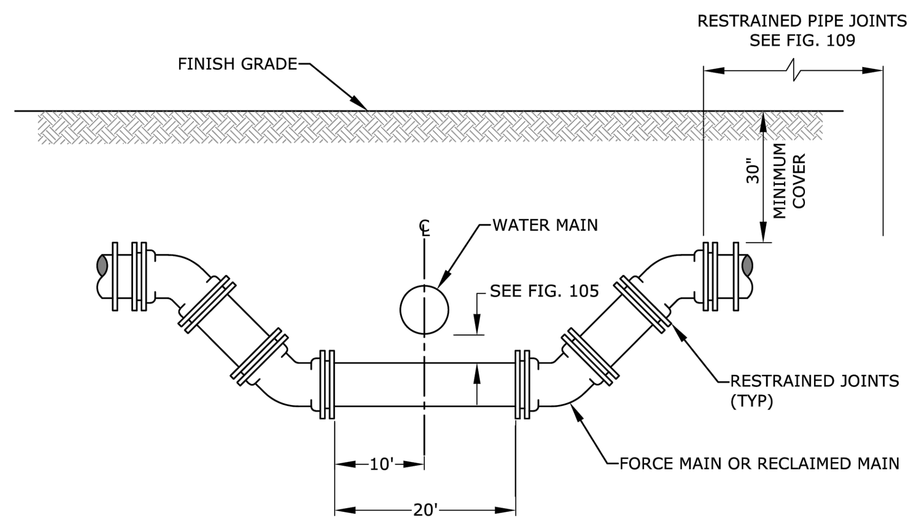

WHEREVER POSSIBLE DEFLECTION OF THE PIPE WILL BE USED TO AVOID EXISTING OBSTRUCTIONS. THIS CROSSING SHALL BE USED ONLY WHEN APPROVED BY WWS.

REVISED 7/7/2021

SPECIAL UTILITY CROSSING

FIGURE 107

BROWARD COUNTY
PUBLIC WORKS DEPARTMENT
PLOTTED: 10/2024

WATER & WASTEWATER SERVICES
ENGINEERING DIVISION
2555 WEST COPANS ROAD
POMPANO BEACH, FL 33069
PHONE NO. 954-831-0745
FAX: 954-831-0925

STANDARD DETAIL

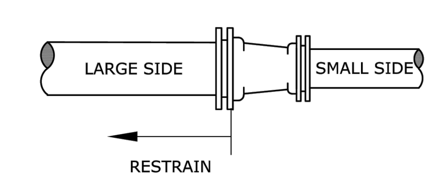

STRAIGHT REDUCER

SMALL SIDE

DUCTILE IRON PIPE				
DIAMETER	6"	8"	10"	12"
4"	15'	27'	36'	45'
6"		16'	27'	38'
8"			15'	28'
10"				16'
PVC PIPE				
	6"	8"	10"	12"
4"	24'	43'	58'	72'
6"		25'	44'	61'
8"			24'	44'
10"				25'

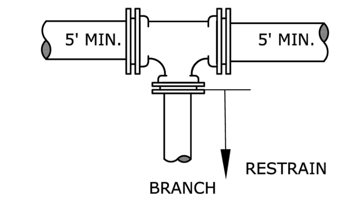

TEE REDUCER

BRANCH SIZE

DUCTILE IRON PIPE				
DIAMETER	6"	8"	10"	12"
4"	1'	1'	1'	1'
6"		6'	1'	1'
8"			15'	10'
10"				23'
PVC PIPE				
	6"	8"	10"	12"
4"	1'	1'	1'	1'
6"		16'	8'	1'
8"			31'	25'
10"				44'

THE NOTED REQUIREMENTS WERE CALCULATED IN ACCORDANCE WITH THRUST RESTRAINT CALCULATOR V7.2 BY EBAA IRON WITH THE FOLLOWING ASSUMPTIONS:
SOIL CONDITIONS: SW OR GW; LENGTH ALONG RUN EQUALS 4 FEET
LAYING CONDITION: 4, SAND BEDDING, BACKFILL COMPACTED > 80%
MINIMUM COVER: 3.0 FT;SAFETY FACTOR: 1.5;BARE PIPE (NO POLY WRAP)
IF FIELD CONDITIONS DIFFER FROM THE ABOVE, CONTRACTOR SHALL NOTIFY WWS.
FOR PIPE LARGER THAN INCLUDED IN THE ABOVE TABLES, ENGINEER OF RECORD SHALL SUBMIT CALCULATIONS FOR EACH JOINT REQUIRING RESTRAINT.

RESTRAINED REDUCING FITTING
150 PSI TEST PRESSURE

REVISED 7/7/2021

RESTRAINED JOINT REQUIREMENTS REDUCING FITTINGS

FIGURE 112

BROWARD COUNTY
PUBLIC WORKS DEPARTMENT
PLOTTED: 10/2024

WATER & WASTEWATER SERVICES
ENGINEERING DIVISION
2555 WEST COPANS ROAD
POMPANO BEACH, FL 33069
PHONE NO. 954-831-0745
FAX: 954-831-0925

STANDARD DETAIL

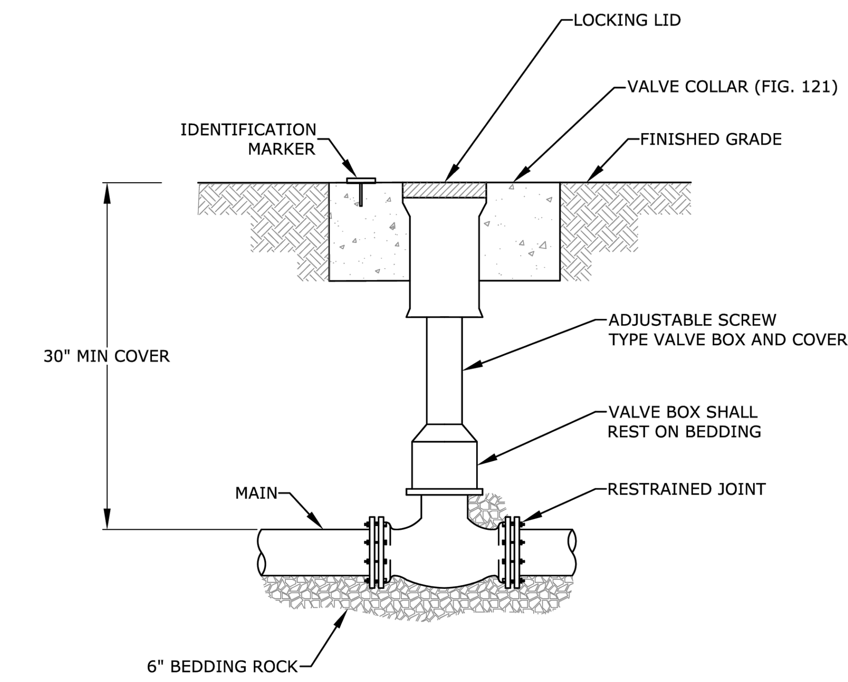

1. WHEN VALVE IS NOT LOCATED IN PAVEMENT, PLACE A WHITE REFLECTIVE RAISED PAVEMENT MARKER IN THE DRIVE LANE, ADJACENT TO THE VALVE.
2. OPERATOR EXTENSION SHAFT SHALL BE PROVIDED WHEN OPERATING NUT IS MORE THAN 24" BELOW TOP OF VALVE BOX.
3. PVC PIPE OR DUCTILE IRON PIPE IS NOT ACCEPTABLE FOR VALVE BOX RISER.

REVISED 7/7/2021

VALVE BOX DETAIL

FIGURE 123

BROWARD COUNTY
PUBLIC WORKS DEPARTMENT
PLOTTED: 10/2024

WATER & WASTEWATER SERVICES
ENGINEERING DIVISION
2555 WEST COPANS ROAD
POMPANO BEACH, FL 33069
PHONE NO. 954-831-0745
FAX: 954-831-0925

STANDARD DETAIL

WATER MAIN SEPARATION IN ACCORDANCE WITH F.A.C. RULE 62-555.314

OTHER PIPE	HORIZONTAL SEPARATION	CROSSINGS (1) (4)	JOINT SPACING @ CROSSINGS (FULL JOINT CENTERED)
STORM SEWER, STORM WATER FORCE MAIN, RECLAIMED WATER (2)	Water Main; 3 ft. minimum	Water Main; 12 inches is the minimum, except for storm sewer, then 6 inches is the minimum and 12 inches is preferred	Alternate 3 ft. minimum; Water Main
VACUUM SANITARY SEWER	Water Main; 10 ft. preferred 3 ft. minimum	Water Main; 12 inches preferred 6 inches min	Alternate 3 ft. minimum; Water Main
GRAVITY SANITARY SEWER,(3) SANITARY SEWER FORCE MAIN, RECLAIMED WATER	Water Main; 10 ft. preferred 6 ft. minimum	Water Main; 12 inches is the minimum, except for gravity sewer, then 6 inches is the minimum and 12 inches is preferred	Alternate 6 ft. minimum; Water Main
ON-SITE SEWAGE TREATMENT & DISPOSAL SYSTEM	10 ft. minimum	—	—

(1) WATER MAIN SHOULD CROSS ABOVE OTHER PIPE. WHEN WATER MAIN MUST BE BELOW OTHER PIPE, THE MINIMUM SEPARATION IS 12 INCHES.
(2) RECLAIMED WATER REGULATED UNDER PART III OF CHAPTER 62-610, F.A.C.
(3) 3 FT. FOR GRAVITY SANITARY SEWER WHERE THE BOTTOM OF THE WATER MAIN IS LAID AT LEAST 6 INCHES ABOVE THE TOP OF THE GRAVITY SANITARY SEWER.
(4) 18" VERTICAL MINIMUM SEPARATION REQUIRED BY WWS, UNLESS OTHERWISE APPROVED.

REVISED 7/7/2021

WATER MAIN SEPARATION

FIGURE 105

BROWARD COUNTY
PUBLIC WORKS DEPARTMENT
PLOTTED: 10/2024

WATER & WASTEWATER SERVICES
ENGINEERING DIVISION
2555 WEST COPANS ROAD
POMPANO BEACH, FL 33069
PHONE NO. 954-831-0745
FAX: 954-831-0925

STANDARD DETAIL

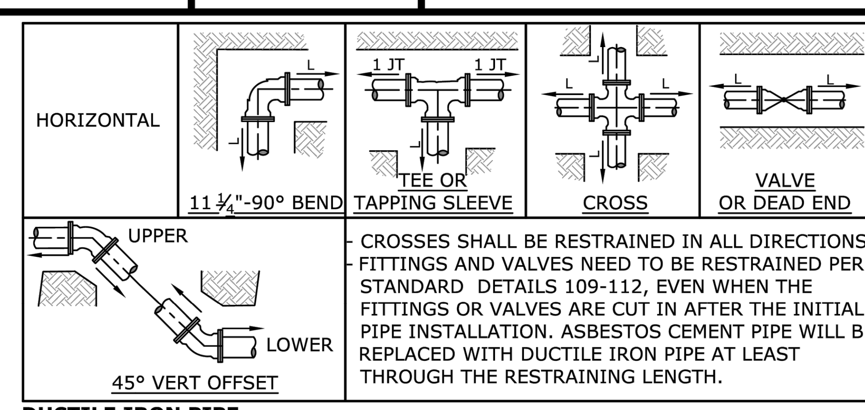

- CROSSES SHALL BE RESTRAINED IN ALL DIRECTIONS.
- FITTINGS AND VALVES NEED TO BE RESTRAINED PER STANDARD DETAILS 109-112, EVEN WHEN THE FITTINGS OR VALVES ARE CUT IN AFTER THE INITIAL PIPE INSTALLATION. ASBESTOS CEMENT PIPE WILL BE REPLACED WITH DUCTILE IRON PIPE AT LEAST THROUGH THE RESTRAINING LENGTH.

DUCTILE IRON PIPE

	HORIZONTAL, L (FEET)						45° VERTICAL OFFSET (FEET)	
Diameter	11 ¼°	22 ½°	45°	90°	Tee or Cross	Valves and Dead End	UPPER	LOWER
4	1	2	4	10	7	20	9	4
6	2	3	6	14	15	28	12	5
8	2	4	8	17	23	37	16	7
10	2	5	9	21	30	44	19	8
12	3	5	10	24	38	52	22	9

PVC PIPE

	HORIZONTAL, L (FEET)						45° VERTICAL OFFSET (FEET)	
Diameter	11 ¼°	22 ½°	45°	90°	Tee or Cross	Valves and Dead End	UPPER	LOWER
4	2	3	5	12	11	32	14	5
6	2	4	7	16	23	45	19	6
8	3	5	9	21	37	59	25	8
10	3	5	11	25	48	71	30	9
12	3	6	12	29	61	83	35	11

THE NOTED REQUIREMENTS WERE CALCULATED IN ACCORDANCE WITH THRUST RESTRAINT CALCULATOR V7.2 BY EBAA IRON WITH THE FOLLOWING ASSUMPTIONS:
SOIL CONDITIONS: SW OR GW; NOMINAL SIZE EQUALS BRANCH SIZE; LENGTH ALONG RUN EQUALS 4 FEET
LAYING CONDITION: 4, SAND BEDDING, BACKFILL COMPACTED > 80%; VERTICAL LOW SIDE DEPTH EQUALS 3.5 FEET
MINIMUM COVER: 3.0 FT SAFETY FACTOR: 1.5 BARE PIPE (NO POLY WRAP)
IF FIELD CONDITIONS DIFFER FROM THE ABOVE, CONTRACTOR SHALL NOTIFY WWS.
FOR PIPE LARGER THAN INCLUDED IN THE ABOVE TABLES, ENGINEER OF RECORD SHALL SUBMIT CALCULATIONS FOR EACH JOINT REQUIRING RESTRAINT.

SINGLE FITTING RESTRAINED JOINT
150 PSI TEST PRESSURE

REVISED 7/7/2021

RESTRAINED JOINT REQUIREMENTS SINGLE FITTING

FIGURE 109

BROWARD COUNTY
PUBLIC WORKS DEPARTMENT
PLOTTED: 10/2024

WATER & WASTEWATER SERVICES
ENGINEERING DIVISION
2555 WEST COPANS ROAD
POMPANO BEACH, FL 33069
PHONE NO. 954-831-0745
FAX: 954-831-0925

STANDARD DETAIL

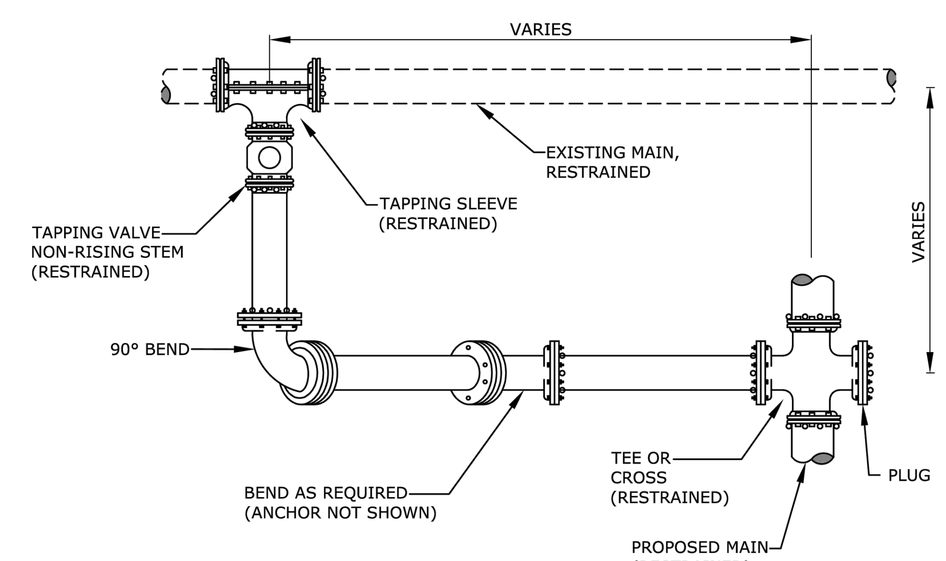

PLAN

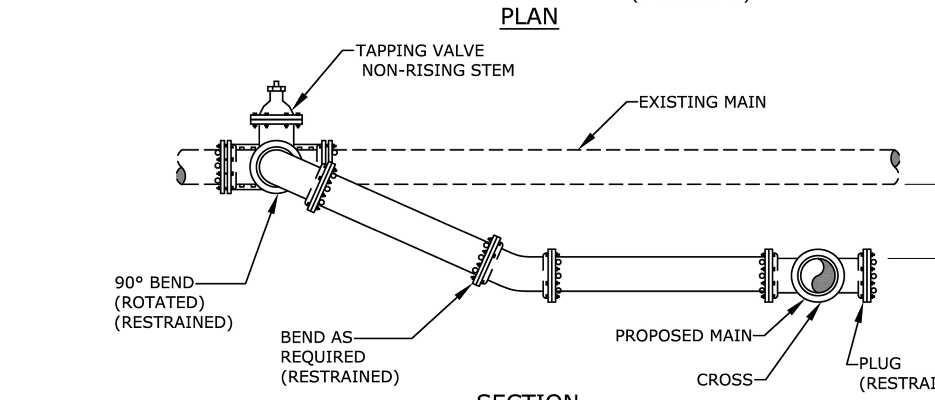

SECTION

NOTES:

1. ALL JOINTS TO BE RESTRAINED BY APPROVED METHODS.
2. IF CONNECTION IS PRIOR TO FDEP CLEARANCE THEN A SECOND VALVE WITH VENT IS REQUIRED.

REVISED 7/7/2021

TYPICAL CONNECTION TO EXISTING MAIN

FIGURE 131

BROWARD COUNTY
PUBLIC WORKS DEPARTMENT
PLOTTED: 10/2024

WATER & WASTEWATER SERVICES
ENGINEERING DIVISION
2555 WEST COPANS ROAD
POMPANO BEACH, FL 33069
PHONE NO. 954-831-0745
FAX: 954-831-0925

STANDARD DETAIL

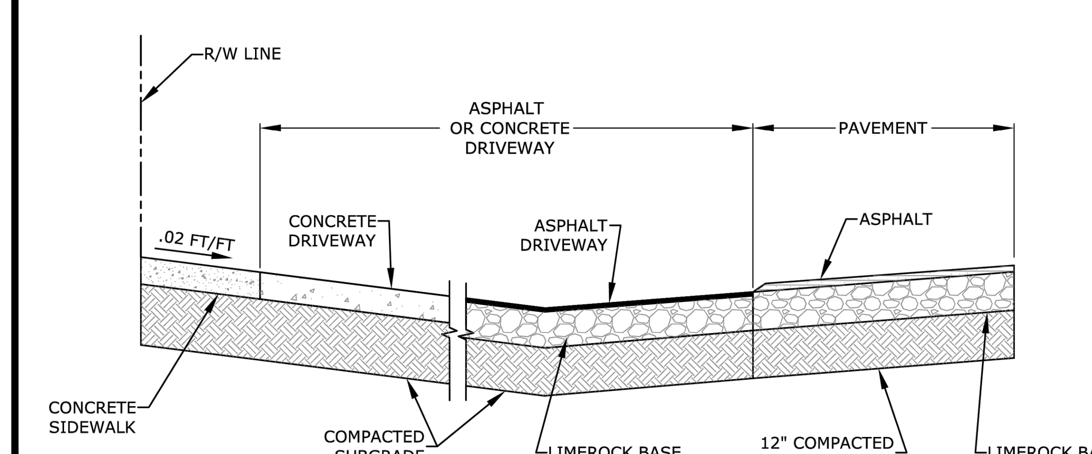

RESTORATION SPECIFICATION
SUMMARY TABLE

TYPE	MATERIAL	SPECIFICATION
TYPE I	SOD, SEED OR MULCH	COMPACTED SUBGRADE (100% PER AASHTO T-99C) BAHIA OR ST. AUGUSTINE SOD TO MATCH EXISTING
TYPE II-A	ASPHALT DRIVEWAY	1-1/2" ASPHALT, 6" LIMEROCK (98% PER AASHTO T-180), COMPACTED SUBGRADE (100% PER AASHTO T-99C)
TYPE III	CONCRETE DRIVEWAY	6" CONCRETE (NO WIRE MESH) COMPACTED SUBGRADE (100% PER AASHTO T-99C)

REVISED 7/7/2021

TYPICAL SECTION THROUGH SWALE

FIGURE 192

DRC

PZ25-12000016

10/01/2025

REV PER CITY COMMENTS	08/25/25	DJP
REVISIONS	DATE	BY

FILE NAME 11146ENG.dwg

CAULFIELD & WHEELER, INC.
CIVIL ENGINEERING
LANDSCAPE ARCHITECTURE - SURVEYING
7900 GLADES ROAD - SUITE 100
BOCA RATON, FLORIDA 33434
PHONE (561)-392-1991 / FAX (561)-750-1452

THE SATORI AT LIGHTHOUSE POINT
4211 N FEDERAL HIGHWAY
WATER DISTRIBUTION & SANITARY SEWER DETAILS
POMPANO BEACH, FL, 33064

DATE 05/28/25
DRAWN BY DJP
F.B./ PG. ----
SCALE N/A

Digitally signed by Matthew V. Kahn
Date: 2025.08.25 18:45:54 -04'00'
Adobe Acrobat version: 2024.002.20687

MATTHEW V. KAHN
PROFESSIONAL ENGINEER
LICENSE NO. 82227
STATE OF FLORIDA
– FOR THE FIRM –
DATE

JOB # 11146
SHT.NO. WS-2
OF 16 SHEETS

Drawing: P:\11146-00-00-00\drawings\eng\details\11146DETAILS-WS_BROWARD.dwg\13-W&S-DETAILS-WS-2